IOP Conference Series: Materials Science and Engineering

PAPER • **OPEN ACCESS**

Determination of residual resource of flat wagons load-bearing structures with a 25-year service life

To cite this article: O Fomin *et al* 2021 *IOP Conf. Ser.: Mater. Sci. Eng.* **1021** 012005

View the article online for updates and enhancements.

This content was downloaded from IP address 94.153.51.153 on 19/01/2021 at 16:45

Determination of residual resource of flat wagons load-bearing structures with a 25-year service life

O Fomin[1], G Vatulia[2], M Horbunov[3], A Lovska[4,6], V. Píštěk[5], P. Kučera[5]

[1]Department of Cars and Carriage Facilities, State University of Infrastructure and Technologies, Kyrylivska str., 9, Kyiv, Ukraine, 04071
[2]Department of Structural Mechanics and Hydraulics, Ukrainian State University of Railway Transport, Feuerbach sq., 7, Kharkiv, Ukraine, 61050
[3]Department of railway and road transport, lift and care systems, Volodymyr Dahl East Ukrainian National University, Central pr., 59a, Severodonetsk, Ukraine, 93400
[4]Department of wagons, Ukrainian State University of Railway Transport, Feuerbach sq., 7, Kharkiv, Ukraine, 61050
[5]Faculty of Mechanical Engineering, Institute of Automotive Engineering, Brno University of Technology, Technická, 2896/2, Brno, Czech Republic, 61669

[6]alyonalovskaya.vagons@gmail.com

Abstract. The article determines the residual resource of flat wagons load-bearing structures with a 25-year service life. For this purpose, field studies of the technical condition of the load-bearing structures of flat wagons based on the wagon depot of the Foundation of the Southern Railway branch of JSC “Ukrzaliznytsia” were carried out. The flat wagon of model 13-401 was chosen as the subject. It is established that the design service life of the load-bearing structures of the studied flat wagons, taking into account the extension of their operation is not less than 18 years. The strength of the load-bearing structure of the flat wagon in the environment of SolidWorks Simulation (CosmosWorks) software by the finite element method is calculated. It is established that the maximum equivalent stresses occur in the zone of interaction of the spine beam with the pivot be equal to 337.5 MPa. Therefore, the strength of the load-bearing structure of the flat wagons is provided. The estimation of the course of the flat wagons is determined. The research was carried out in the vertical plane during the movement of the butt rail track. The calculation was performed in the MathCad software environment by the Runge-Kutta method. The assessment of the wagon is "excellent". The conducted researches will promote increase of efficiency of combined transportations in the international communication and strengthening of foreign economic positions of Ukraine in the market of transport services.

1. Introduction

Ukraine has long been a crossroads of strategically important international transport corridors. Today, the link provides transport logistics between Europe and Asia.

In order to increase the volume of traffic through the territory of Ukraine, combined transport systems have been developed. One of the most promising among such systems are container and piggyback.

It is known that one of the most popular types of wagons in the international combined service are flat wagons. To increase the efficiency of the use of flat wagons in international traffic, their modernization is carried out, which consists in the installation of stationary or folding fitting stops on the load-bearing structure. This allows adapting the load-bearing structures of universal flat wagons to combined transport, in particular container.

Content from this work may be used under the terms of the Creative Commons Attribution 3.0 licence. Any further distribution of this work must maintain attribution to the author(s) and the title of the work, journal citation and DOI.
Published under licence by IOP Publishing Ltd

At the same time, the level of replenishment of the wagon fleet of Ukraine in recent years is quite insignificant. In this regard, it is possible to determine the residual life of the operated flat wagons, consider the possibility of extending their service life in order to be able to be involved in international traffic. This will ensure the efficiency of combined transportation in international traffic and strengthen Ukraine's foreign economic position in the transport services market.

The substantiation of the extension of the useful life of wagons for the transportation of pellets is covered in [1]. To assess the possibility of further operation of wagons, an experimental determination of the level of load and stress state of the load-bearing structures of wagon bodies based on static, impact and strength tests.

Prediction of the residual life of the hopper dispenser wagon after long operation, taking into account the actual physical and mechanical characteristics of the material of the load-bearing structures is carried out in [2]. A procedure for forecasting the residual life of the load-bearing structure of the wagon has been developed. The results of virtual and experimental studies of the strength of the load-bearing structure of the wagon are presented. However, these studies were performed on hopper wagons. The authors did not study the issue of extending the service life of flat wagons.

The need to adjust the Regulations on extending the service life of freight wagons plying in international traffic is considered in [3]. The expediency of introducing requirements for rolling stock, the service life of which is extended, is substantiated.

Substantiation of options for extending the service life of specialized flat wagons is covered in [4]. Methods of comparative assessment of options for extending the service life of flat wagons, which take into account the economic component of these types of work. Research has been conducted on universal flat wagons, as well as double-decker flat wagons for wagon transportation. Studies on the extension of the service life of flat wagons for the transportation of containers have not been considered in the work.

The study of the possibility of extending the service life of the bodies of universal gondola wagons, which have exhausted their regulatory life, is carried out in [5]. The specified dynamic loadings acting on a bearing design of a gondola wagon taking into account real wear of its elements are defined. However, the authors did not pay attention to the study of the possibility of extending the service life of flat wagons.

Substantiation of measures to extend the service life of freight wagons was carried out in [6]. The scheme of technical diagnostics of freight wagons is developed. It is concluded that it is possible to extend the service life of freight wagons only through the implementation of high-quality technical diagnostics. However, there is no applied use of the proposed measures.

The purpose of the article is to determine the residual life of load-bearing structures of flat wagons with a 25-year service life to justify further use in the international combined service. To achieve this goal, the following tasks are set:

- investigate the technical condition of the main load-bearing elements of the frames of flat wagons with a 25-year service life;
- to calculate the design service life of the load-bearing structure of the flat wagon;
- calculate the strength of the load-bearing structure of the flat wagon;
- assess the progress of the flat wagon.

2. Presentation of the main material of the article

In order to verify the possibility of extending the service life of the load-bearing structure of the flat wagon, the method described in [7] was used. This technique allows determining the residual life of the elements of the load-bearing structures of wagon bodies, taking into account the probability of their failure in operation and the maximum values of equivalent stresses. As input parameters to this technique, statistical data of geometric dimensions of the main load-bearing elements of the frames of flat wagons (spine beam and main longitudinal) with a service life of about 25 years were used. The flat wagon of model 13-401 of the Dneprodzerzhinsk wagon-building plant was chosen as the researched one (Figure 1).

As is known, the backbone and the main longitudinal beams of the flat wagon 13-401 consist of two I-beams №60, which has a variable length. In cantilever parts of a frame height of an I-beam makes 360 mm.

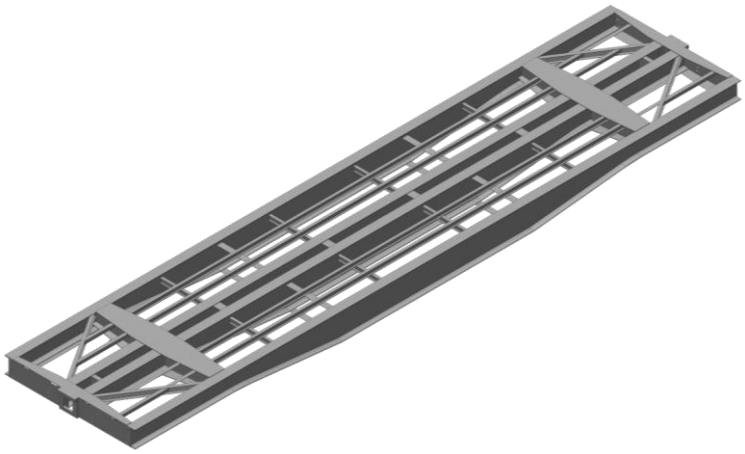

Figure 1. The load-bearing structure of the flat wagon model 13-401.

To justify the extension of the service life of the flat wagon, field studies of the technical condition of the main load-bearing elements of the frame were carried out based on the wagon depot. The value measured during field studies is the thickness of the I-beam rack (Figure 2).

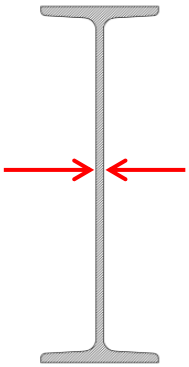

Figure 2. The area of measurement of the thickness of the rack of the I-beam.

The number of measurements is 20. The measurement results are given in tables 1, 2.

Table 1. The results of measurements of wear of the I-beam of the spine beam of the frame of the flat wagon 13-401.

Sequence number of the wagon	1	2	3	4	5	6	7	8	9	10
Measurement value, mm	11.74	11.74	11.74	11.74	11.72	11.72	11.72	11.7	11.7	11.72
Sequence number of the wagon	11	12	13	14	15	16	17	18	19	20
Measurement value, mm	11.72	11.72	11.76	11.74	11.74	11.72	11.7	11.7	11.72	11.72

Table 2. The results of measurements of wear of the I-beam of the longitudinal beam of the frame of the flat wagon 13-401.

Sequence number of the wagon	1	2	3	4	5	6	7	8	9	10
Measurement value, mm	11.7	11.69	11.7	11.71	11.71	11.7	11.72	11.7	11.7	11.72
Sequence number of the wagon	11	12	13	14	15	16	17	18	19	20
Measurement value, mm	11.72	11.72	11.72	11.7	11.71	11.7	11.7	11.7	11.72	11.72

An important step in field research is to determine the number of statistics needed to obtain an adequate result. The required number of static data was determined by the formula [8]

$$n = \frac{t^2 \cdot \sigma^2}{\delta^2}, \tag{1}$$

where t is determined from the ratio F(t) = γ/2; F(t) is Laplace function, tabular value; σ is standard deviation of the random variable under study, which must be known a priori, even before the experimental measurements; δ^2 is absolute error of measurement result.

In technical measurements, the value of measurement reliability is usually taken equal to p = 0.95. When the number of measurements is n = 20, we take the Student's distribution parameter t_γ equal to 2.1

Based on the calculations it is established that for the samples given in tables 1 and 2 the number of measurements is sufficient to obtain an adequate assessment of the result.

The used technique in comparison with an expert assessment essentially increases reliability of the chosen decision on appointment of new service life of the wagon. In addition, this technique allows you to determine the residual service life with the same reliability for any number of wagons.

In accordance with the method, the probability of failure P_i elements of the load-bearing structure of the flat wagon in operation is determined by the formula

$$P_i = \frac{\sum_{1}^{k} \frac{R_H}{R}}{k}, \tag{2}$$

where k is the number of studied wagons; R_H is the number of defective elements of one type in the wagon; R is the total number of elements of one type.

Estimation of design service life was determined by the formula [7]

$$T_k = \frac{\left(\frac{\sigma_{a_i N}}{[n]}\right)^m \cdot N_0}{N_{cI} \cdot \sum_j \left(\sigma_{a_j}^I\right)^m \cdot P_j^I + N_{cII} \cdot \sum_k \left(\sigma_{a_k}^{II}\right)^m \cdot P_k^{II}}, \tag{3}$$

where σ_{aiN} is the average value of the endurance limit; [n] is allowable margin of safety; N_0 is test base; N_{cI}, N_{cII} are the number of eponymous faulty structural elements of the wagon under study; m is

an indicator of the degree of fatigue curve; σ_{aj}^{I}, σ_{ak}^{II} are the ultimate strength of the material under study; P_j^I, P_k^{II} are the probability of failure of the structural element.

The initial data have the following values:

- the average value of the endurance limit σ_{aiN} =245 MPa;
- allowable safety factor [n]=2;
- test base $N_0=10^7$;
- the number of faulty structural elements of the wagon of the same name under study is equal to 1 (spine beam) and 2 (longitudinal beam);
- indicator of the degree of fatigue curve m = 2;
- the strength limit of the load-bearing structure is equal to 490 MPa for steel 09G2D.

The obtained results allowed to conclude that the design service life of the ridge and longitudinal beams of the studied flat wagons, taking into account the extension of their operation is not less than 18 years.

At the next stage, the main indicators of the strength of the load-bearing structure of the flat wagon with the highest amount of wear recorded during field research (Tables 1, 2) were determined. It is established that the mass of the load-bearing structure of the flat wagon, taking into account the wear of its elements, is 3.5% less than the load-bearing structure of the flat wagon, which has nominal dimensions. The strength calculation was performed by the finite element method, which is implemented in the SolidWorks Simulation (CosmosWorks) software environment [9 – 13]. The finite element model of the load-bearing structure of the flat wagon is shown in Figure 3. When determining the number of grid elements, the graph analytical method was used [14 – 17]. Ten-node isoperimetric tetrahedral were used as finite elements. The number of grid elements was 838084, nodes – 274584. The maximum size of the element was 100 mm, the minimum – 20 mm, the maximum aspect ratio – 4702.9, the percentage of elements with a side ratio less than 3 – 39.3, more than 10 – 10.2 . The model was fixed in the areas of support of the load-bearing structure on the bogies.

Figure 3. Finite-element model of the load-bearing structure of the flat wagon.

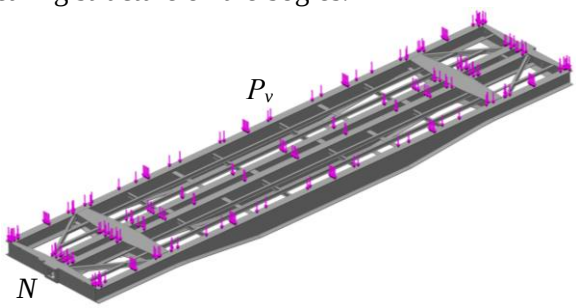

Figure 4. The design scheme of the load-bearing structure of the flat wagon in the I design mode.

When compiling the design scheme of the load-bearing structure of the flat wagon (Figure 4), the following loads were taken into account: vertical P_v and longitudinal N. It is taken into account that the full load capacity of the flat wagon loaded with conditional cargo is used. The calculation was performed for I and III calculation modes.

The results of the calculation of the strength of the load-bearing structure of the flat wagon in the I design mode "impact" are shown in Figures 5, 6.

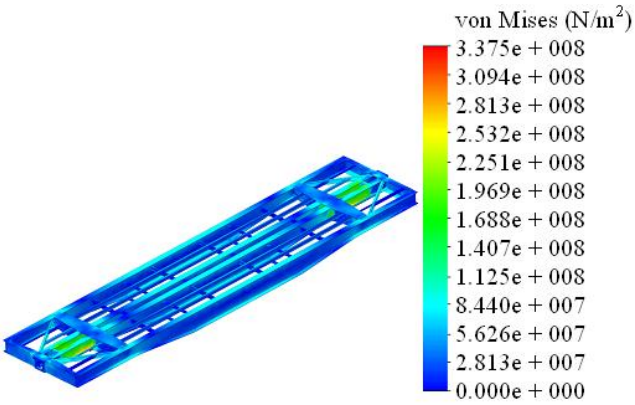

Figure 5. The stress state of the load-bearing structure of the flat wagon.

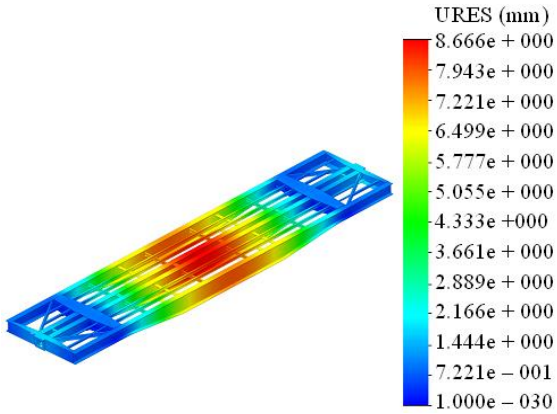

Figure 6. Movement in the nodes of the load-bearing structure of the flat wagon.

The results of the calculation of the strength of the load-bearing structure of the flat wagon at I and III calculation modes are given in Table 3.

Table 3. Indicators of strength of the load-bearing structure of the flat wagon under operational load conditions.

Strength indicators	Load mode				
	I			III	
	shock	compression	jerk-stretching	blow-compression	jerk-stretching
Stress, MPa	337.5	313.6	296.8	287.98	280.8
Movement in knots, mm	8.6	8.4	8.3	8.1	7.8

Based on the calculations, we can conclude that the maximum equivalent stresses occur in the area of interaction of the spine beam with the pivot is not equal to 337.5 MPa. The maximum displacements in the nodes of the load-bearing structure of the flat wagon are recorded in the middle part of the frame – 8.6 mm. Therefore, the strength of the load-bearing structure of the flat wagon is provided [18 – 20]. In order to use the flat wagon for container transportation, it is possible to install fitting stops on its load-bearing structure.

To determine the assessment of the flat wagon, mathematical modeling of the dynamic load of its load-bearing structure was performed. For this purpose, the mathematical model given in [21] was used. The model takes into account the movement of the wagon in the vertical plane when moving the butt rail track. The calculation is performed for the case of empty wagon movement in the MathCad software environment. The Runge-Kutta method was used as a calculation. Based on the calculations, the accelerations that act on the load-bearing structure of the wagon in the center of mass (Figure 7), in the areas of support on the running gear (Figure 8).

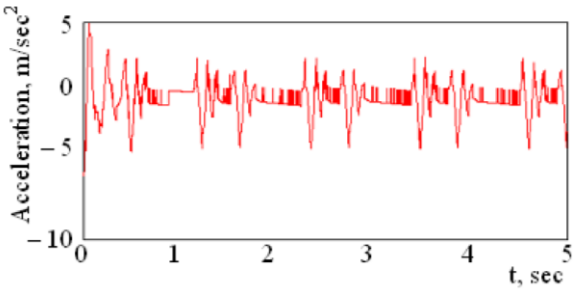

Figure 7. Acceleration of the load-bearing structure of the flat wagon in the center of mass.

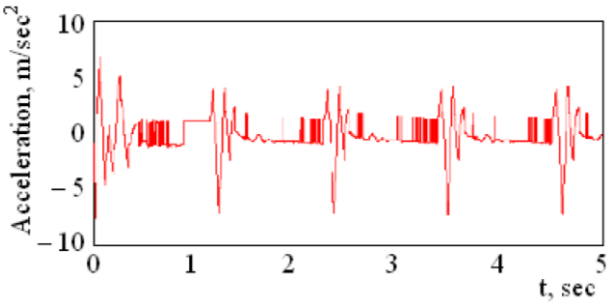

Figure 8. Acceleration of the load-bearing structure of the flat wagon in the areas of support on the bogies.

From Figure 7 shows that the acceleration of the load-bearing structure of the flat wagon in the center of mass is 5 m/s^2 (0.5g). The acceleration of the load-bearing structure of the flat wagon in the areas of support on the carts is about 7.5 m/s^2 (0.75g), (Figure 8). The acceleration of the carts is about 10 m/s^2 (1.0 g). The obtained results allow us to conclude that the assessment of the wagon is "excellent".

Conclusions

1. The technical condition of the main bearing elements of frames of flat wagons with 25-year service life is investigated. At the same time, field research was conducted based on the wagon depot of the Basis of the Southern Railway branch of JSC Ukrzaliznytsia. The thickness of the leg of the dorsal ridge and the main longitudinal beams of the frame is taken into account as the studied value.

2. The design service life of the load-bearing structure of the flat wagon is calculated. The obtained results allowed to conclude that the design service life of the ridge and longitudinal beams of the studied flat wagons, taking into account the continuation of their operation is not less than 18 years.

3. The calculation of the strength of the load-bearing structure of the flat wagon. The finite element method, which is implemented in the CosmosWorks software environment, is used as a calculation. It is established that the maximum equivalent stresses occur in the zone of interaction of the spine beam with the pivot be equal to 337.5 MPa. The maximum displacements in the nodes of the load-bearing structure of the flat wagon are recorded in the middle part of the frame – 8.6 mm. That is, the strength of the load-bearing structure of the flat wagon is provided.

4. An assessment of the progress of the flat wagon. The research was carried out in the vertical plane during the movement of the butt rail track. The acceleration of the load-bearing structure of the flat wagon in the center of mass was 5 m/s^2 (0.5g). The acceleration of the load-bearing structure of the flat wagon in the areas of support on the carts is about 7.5 m/s^2 (0.75g). The acceleration of the carts is about 10 m/s^2 (1.0 g). Therefore, the assessment of the wagon is "excellent".

The conducted research will help to increase the efficiency of the use of flat wagon, and hence the transportation process in international traffic.

Acknowledgments: The authors gratefully acknowledge funding from the Specific research on "Innovative principles for creating resource-saving structures of railroad cars based on the refined dynamic loads and functionally adaptive flash-concepts", which is funded from the State budget of Ukraine in 2020 and "Development of conceptual frameworks for restoring the efficient operation of obsolete freight cars" (Project registration number: 2020.02/0122).

References

[1] Anofriev V G, Rejdemejster A G, Kalashnik V A and Kuleshov V P 2016 K voprosu prodleniya poleznogo sroka sluzhby vagonov dlya perevozki okatyshej *Nauka ta progres transportu. Visnik Dnipropetrovskogo nacionalnogo universitetu zaliznichnogo transportu* **3 (63)** pp 148–160 doi 10.15802/stp2016/74749

[2] Putyato A V, Konovalov E N and Afanaskov P M 2016 Prognozirovanie ostatochnogo resursa vagona hopper-dozatora posle dlitelnoj ekspluatacii s uchetom fakticheskih fiziko-mehanicheskih harakteristik materiala nesushej konstrukcii *Mehanika mashin, mehanizmov i materialov* **1(34)** pp 26–35

[3] Boronenko Yu P, Tretyakov A V, Zharova E A 2012 O korrektirovke Polozheniya o prodlenii sroka sluzhby gruzovyh vagonov, kursiruyushih v mezhdunarodnom soobshenii *Evraziya vesti Moskva* **10** pp 13–14

[4] Zharova E A 2008 Obosnovanie variantov prodleniya srokov sluzhby specializirovannyh vagonov-platform (Cham: Sankt Peterburg PGUPS) p 16

[5] Okorokov A M, Fomin O V, Lovska A O, Vernigora R V, Zhuravel I L and Fomin V V 2018 Research into a possibility to prolong the time of operation of universal semi-wagon bodies that have exhausted their standard resource *Eastern-European journal of enterprise technologies* **3/7(93)** pp 20–26 doi: 10.15587/1729-4061.2018.131309

[6] Sapronova S Yu, Bulich D I and Tkachenko V P 2017 Prodovzhennya terminu ekspluataciyi vantazhnih vagoniv *Visnik Shidnoukrayinskogo Nacionalnogo universitetu imeni Volodimira Dalya* **3 (233)** pp 179–182

[7] Afanasev A V 2008 Sovershenstvovanie metodiki ocenki tehnicheskogo sostoyaniya i raschetnogo obosnovaniya prodleniya sroka sluzhby poluvagonov *Transport Urala* **1** pp 49–52

[8] Kosmin V V 2007 Osnovy nauchnyh issledovanij (Moscow: GOU "Uchebno-metodicheskij centr po obrazovaniyu na zheleznodorozhnom transporte") p 271

[9] Fomin O, Lovska A 2020 Improvements in passenger car body for higher stability of train ferry Engineering Science and Technology an International Journal https://doi.org/10.1016/j.jestch.2020.08.010

[10] Fomin O, Lovska A, Píštěk V and Kučera P 2020 Research of stability of containers in the combined trains during transportation by railroad ferry *MM SCIENCE JOURNAL* **1** pp 3728 – 3733

[11] Fomin O, Lovska A, Píštěk V and Kučera P 2019 Dynamic load computational modelling of containers placed on a flat wagon at railroad ferry transportation *VIBROENGINEERING PROCEDIA* **29** pp 118–123

[12] Dižo J Steišunas S Blatnický M 2016 Simulation analysis of the effects of a rail vehicle running with wheel flat *Manufacturing Technology* **16 5** pp. 889-896.

[13] Dižo J Harušinec J Blatnický M 2015 Multibody system of a rail vehicle bogie with a flexible body *Manufacturing Technology* **15 5** pp. 781-788.

[14] Fomin O, Lovska A, Radkevych V, Horban A, Skliarenko I and Gurenkova O 2019 The dynamic loading analysis of containers placed on a flat wagon during shunting collisions *ARPN Journal of Engineering and Applied Sciences* **14 21** pp 3747–3752

[15] Vatulia G L, Lobiak O V, Deryzemlia S V, Verevicheva M A and Orel Ye F 2019 Rationalization of cross-sections of the composite reinforced concrete span structure of bridges with a monolithic reinforced concrete roadway slab *IOP Conference Series: Materials Science and Engineering* **664** 012014 doi:10.1088/1757-899X/664/1/012014

[16] Vatulia G Komagorova S Pavliuchenkov M 2018 Optimization of the truss beam. Verification of the calculation results *MATEC Web of Conferences* **230** 02037 doi: 10.1051/matecconf/201823002037

[17] Kondratiev A V, Gaidachuk V E, Kharchenko M E 2019 Relationships between the ultimate strengths of polymer composites in static bending, compression, and tension *Mechanics of Composite Materials* **52 2** pp 259–266

[18] DSTU 7598:2014 2014 Vagoni vantazhni. Zagalni vimogi do rozrahunkiv ta proektuvannya

novih i modernizovanih vagoniv koliyi 1520 mm (nesamohidnih) p 162
[19] GOST 33211-2014 2014 Vagonyi gruzovyie. Trebovaniya k prochnosti i dinamicheskim kachestvam p 54
[20] DIN EN 12663-2-2010 2010 Railway applications – Structural requirements of railway vehicle bodies – Part 2: Freight wagons p 54
[21] Domin Yu V and Chernyak G Yu 2003 Osnovi dinamiki vagoniv (Cham: Kiyiv KUETT) p 269